Dura5 Battery Operating Manual

DURACELL®
ENERGY

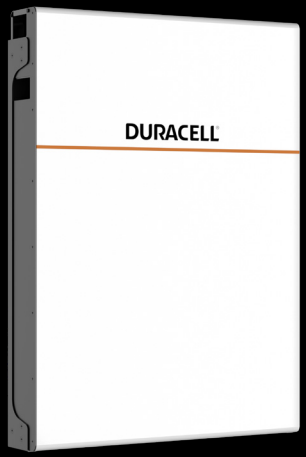

V1

Contents

Safety Precautions **2**
- Safety Warning 2
- Installation Location 3
- Usage Precautions 3

Specifications and Functions **5**

Installation Procedure **6**
- DC Cable Requirements 6
- Installation steps 9

Operation **15**
- System Startup: 15
- System Shutdown: 15
- Sleep and Wake-up Function 15
- System Status Instructions 16
- LED Flash Status 17

Safety Precautions

Safety Warning

- **Connection Safety:** Ensure all power and communication cables are securely and correctly connected to prevent damage or fire hazards. Improper connections may deactivate the system.
- **Environmental Considerations:** Avoid installing the system in enclosed areas, direct sunlight, or close proximity to heaters to prevent fire or equipment damage. Additionally, keep the system away from areas with excessive oil, smoke, steam, moisture, or dust to minimize the risk of fire or electric shock.
- **Personal Protective Equipment:** Always wear insulating gloves and protective eyewear during installation to safeguard against electric shock or injury.
- **Water and Foreign Objects:** Prevent water and foreign objects from entering the module to avoid fire or electric shock. If infiltration occurs, immediately turn off the power supply.
- **Disassembly Prohibition:** Do not disassemble the unit as this increases the risk of fire or electric shock. There are no serviceable parts inside the unit. Access will void the warranty.
- **Ventilation and Placement:** Ensure adequate ventilation for the system and avoid covering any ventilation openings. Install the system on a stable, level surface and refrain from placing it on unstable surfaces or covering vents.
- **Transportation Safety:** Utilize designated packaging materials and follow installation instructions carefully to prevent injuries during transportation.
- **Rack Stability:** Secure all racks firmly to the floor to prevent injuries caused by falling equipment.
- **Accessory Installation:** Ensure proper installation of any additional equipment or accessories to prevent falls and potential injuries.

- **Cable Management:** Organize and secure all cables appropriately to prevent tripping hazards or equipment falls.
- **Malfunction Response:** In the event of a malfunction, turn off the power supply immediately to prevent further issues.
- **Prohibited Use:** Do not stand on or place objects on the unit or use it as a stool or table.
- **Safe Disposal.** Dispose of the unit properly according to relevant regulations.
- **Liquid Leakage:** If liquid leaks from the module, take precautions to avoid skin or eye contact. Seek medical attention if necessary and contact customer service.

Installation Location

- Keep Away from Heat and Fire: Due to the LiFePO4 battery chemistry, DO NOT install the Dura-5 near heat sources, open flames, or flammable materials.
- Avoid Moisture and Water: The IP20 rating signifies the unit is not water-resistant. DO NOT install the Dura-5 outdoors, in damp locations, or near sources of water.
- Well-Ventilated Space: Ensure the installation location provides adequate ventilation to prevent heat buildup around the unit.

Usage Precautions

- In case of any abnormalities such as unusual sounds, odors, smoke, water ingress, physical damage, or a drop, promptly turn off the system and contact customer service.
- Operate the product according to controller signals, and refrain from puncturing it.
- Call customer services if the module experiences a significantly faster than normal discharge rate at room temperature, even when fully charged.

- Recommended Operating Temperature: -20°C to 55°C (-4°F to 131°F)
- High-Temperature Usage: While occasional use in higher temperatures is permissible, prolonged exposure to temperatures above 45°C (113°F) can significantly accelerate battery degradation. This condition is not covered under the Product warranty. For more detailed information, please refer to the Dura-5 Consumer Warranty document.

Note: For optimal performance, extended battery life, and safety, we strongly recommend installing the Dura-5 indoors, in a cool, dry, and well-ventilated location away from heat sources, open flames, water, and flammable materials.

Prohibited Actions

- Disassembling or modifying the product is strictly prohibited, as it may compromise internal protective functions and lead to abnormal operation, heat generation, gas emission, or fire and will void the warranty.
- Do not touch the output terminal except for installation purposes.
- Exposing the system to fire, heat, open flames, or submerging it in liquid is strictly forbidden.
- Avoid applying strong shocks, crushing, or dropping the product.
- This system is not intended for medical purposes, and foreign objects must not be inserted into it.
- Do not connect devices exceeding the specified operating voltage and current range.
- Unplugging the power connector from the POWER CONNECTOR terminal while the power is on is strictly prohibited.

Specifications and Functions

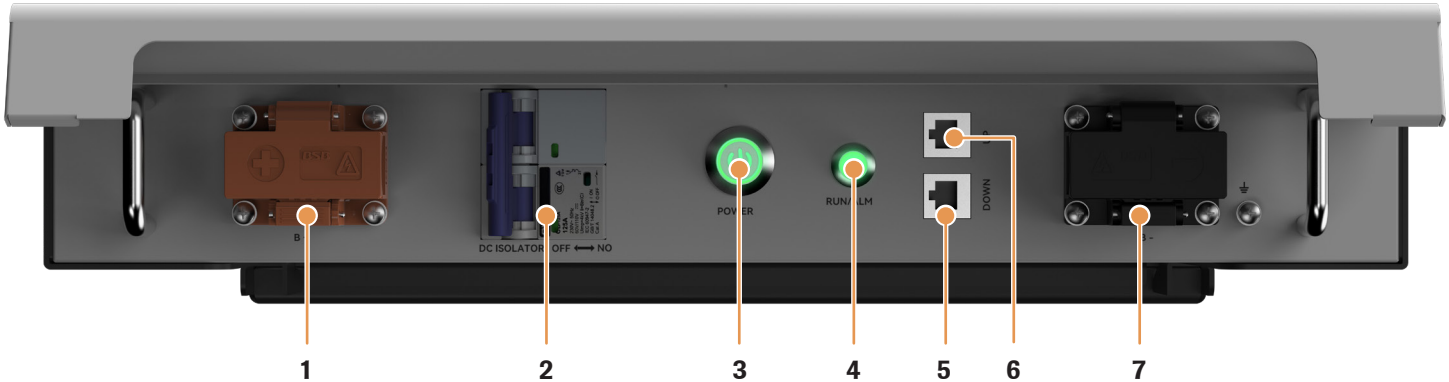

Figure 1. Front View of Dura5

Item	Name	Model	Remarks
1	Positive terminal	B-A-250F-M06-N-E	Orange
2	Breaker	CB-125A-2P	DC isolation
3	Power button	22M-EDYZ-G	Turn power ON and OFF
4	LED indicator	LED Lights Indicator	Battery Status and Alarm
5	LINK IN	Communication port	RS485/CAN Internal connection
6	LINK OUT	Communication port	RS485/CAN Internal connection
7	Negative Terminal	B-A-250F-M06-A-E	Black

Installation Procedure

DC Cable Requirements

Caution

DC Cable must be a multistranded wire.

Danger

Turn off the system before making electrical connections.
Ensure all cables are in a safe electrical condition.

Material	Specifications	Max. Voltage	Rated Current
Silicone wire	4AWG/25mm	1000V	120A

Mounting the Battery on a Wall

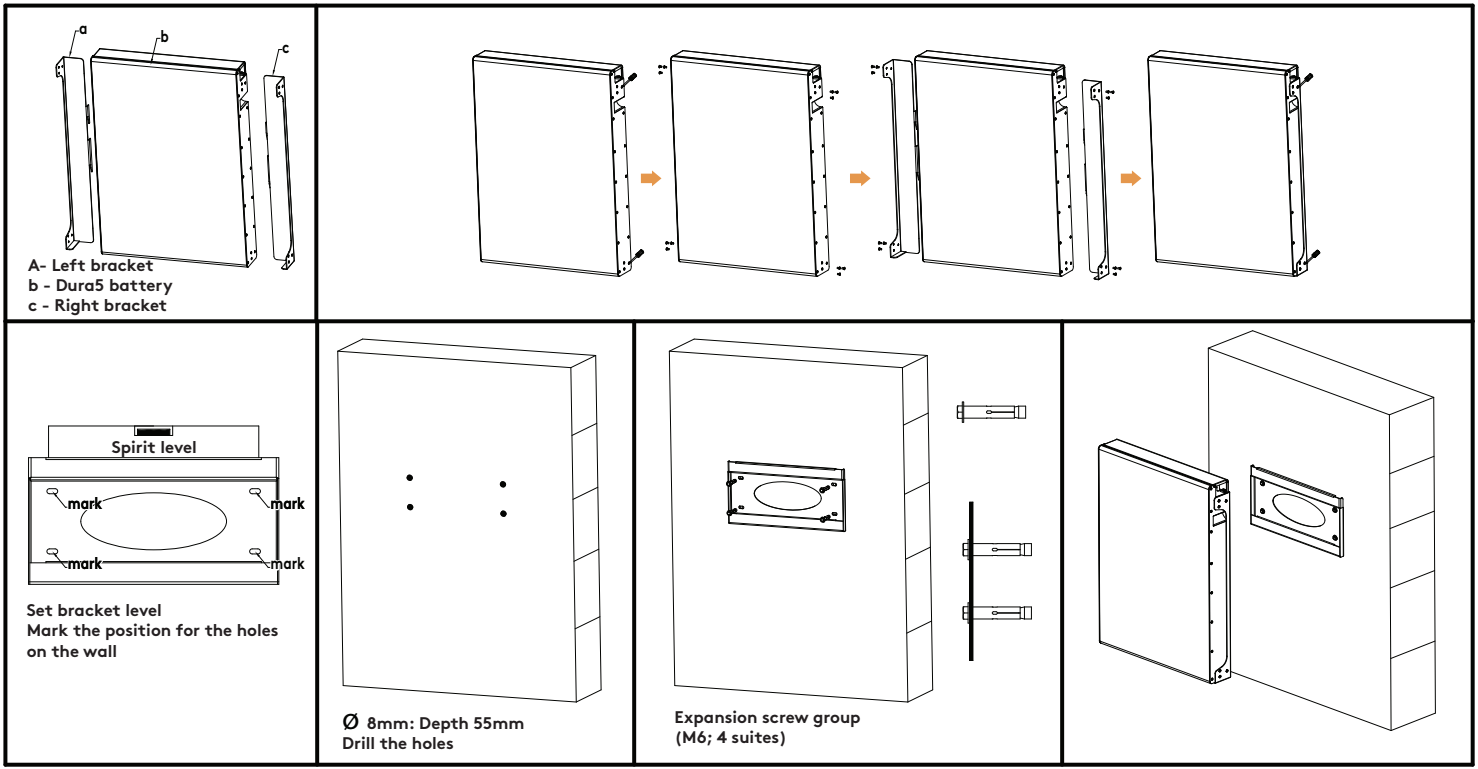

Figure 2. Install steps for wall mounting on the supplied bracket

Mounting the Battery as a Stack

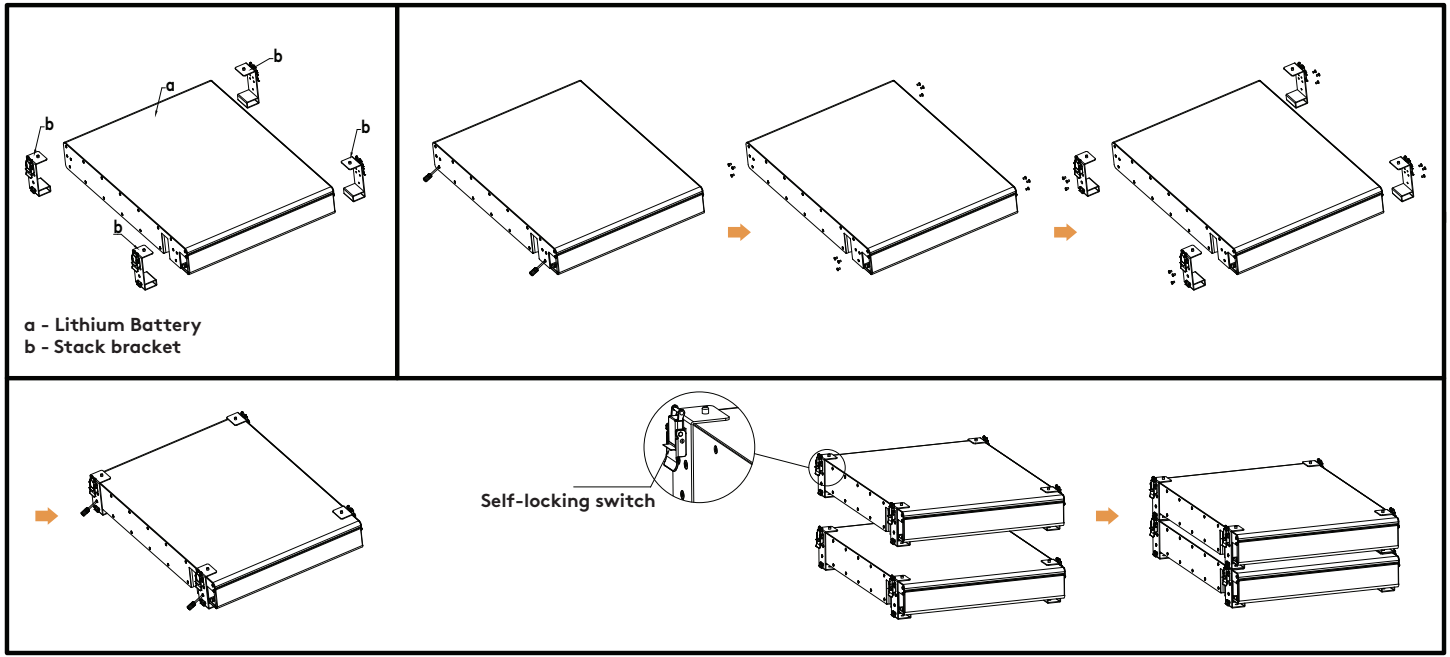

Figure 3. Install steps for stacking the battery

Installation steps

- (If applicable): If a DC isolator switch is present, ensure it is turned to the OFF position before proceeding.
- Power down the Battery: Locate the battery's power button and press it firmly to turn the battery OFF and turn off its own breaker.
- If stacking, use a block to raise off floor at least 100mm recommended.
- If mounting on a wall, ensure the battery is accessible for the user and qualified personnel.
- Battery to battery power cables to be cut to size using 6mm lugs and heatshrink.
- Connect the Negative Terminal: Using an appropriate power cable, connect the negative terminal of the battery to the negative terminal of the charger or inverter.
- Ensure all external-facing (exposed) terminals are covered for safety (refer to Figure 6 on page 12)
- Ensure a secure and tight connection using 6mm lugs and heatshrink.
- Connect the Positive Terminal: Using an appropriate power cable, connect the positive terminal of the battery to the positive terminal of the charger or inverter. Double-check that both connections are secure and properly tightened.

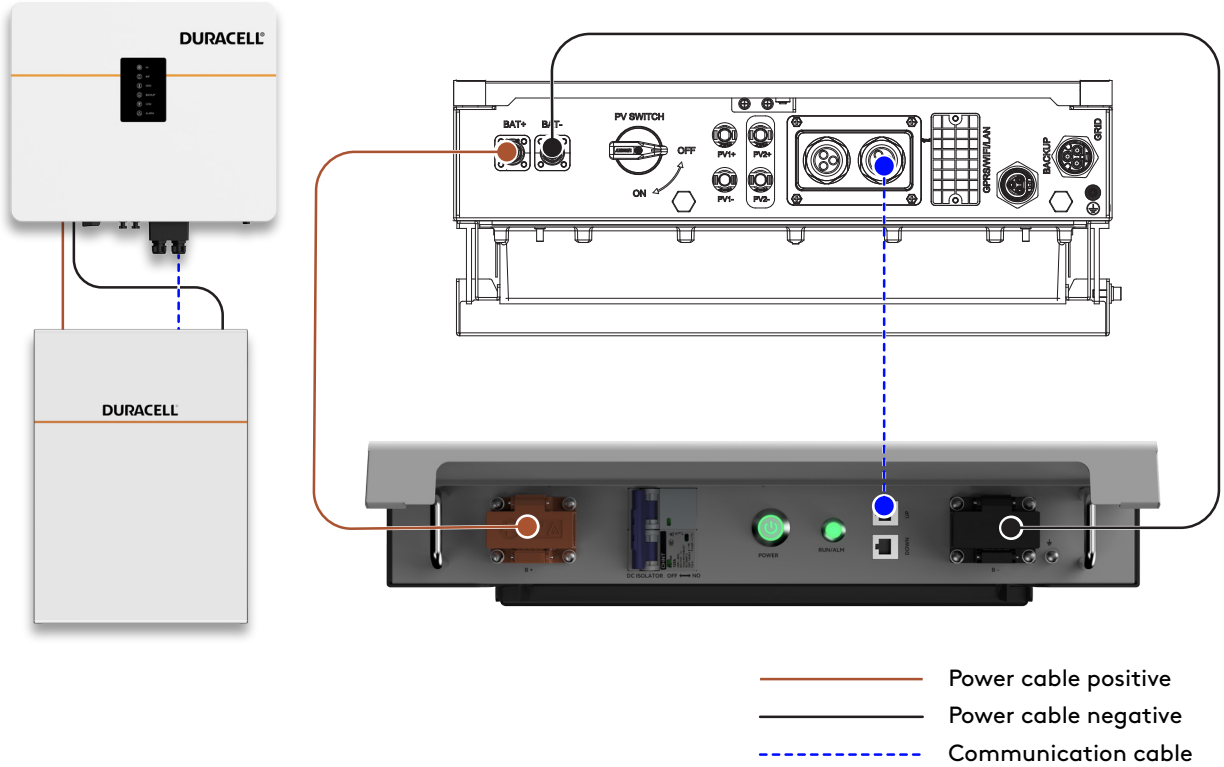

Figure 4. Single Unit connection of Dura5

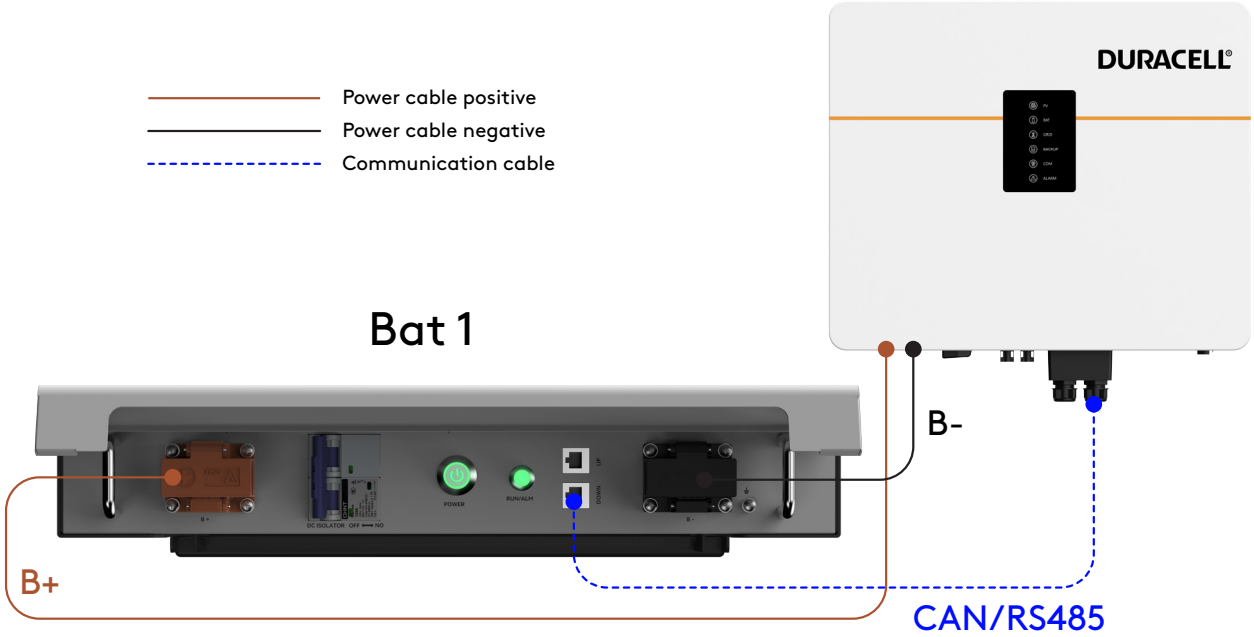

Figure 5. Single Unit connection of Dura5

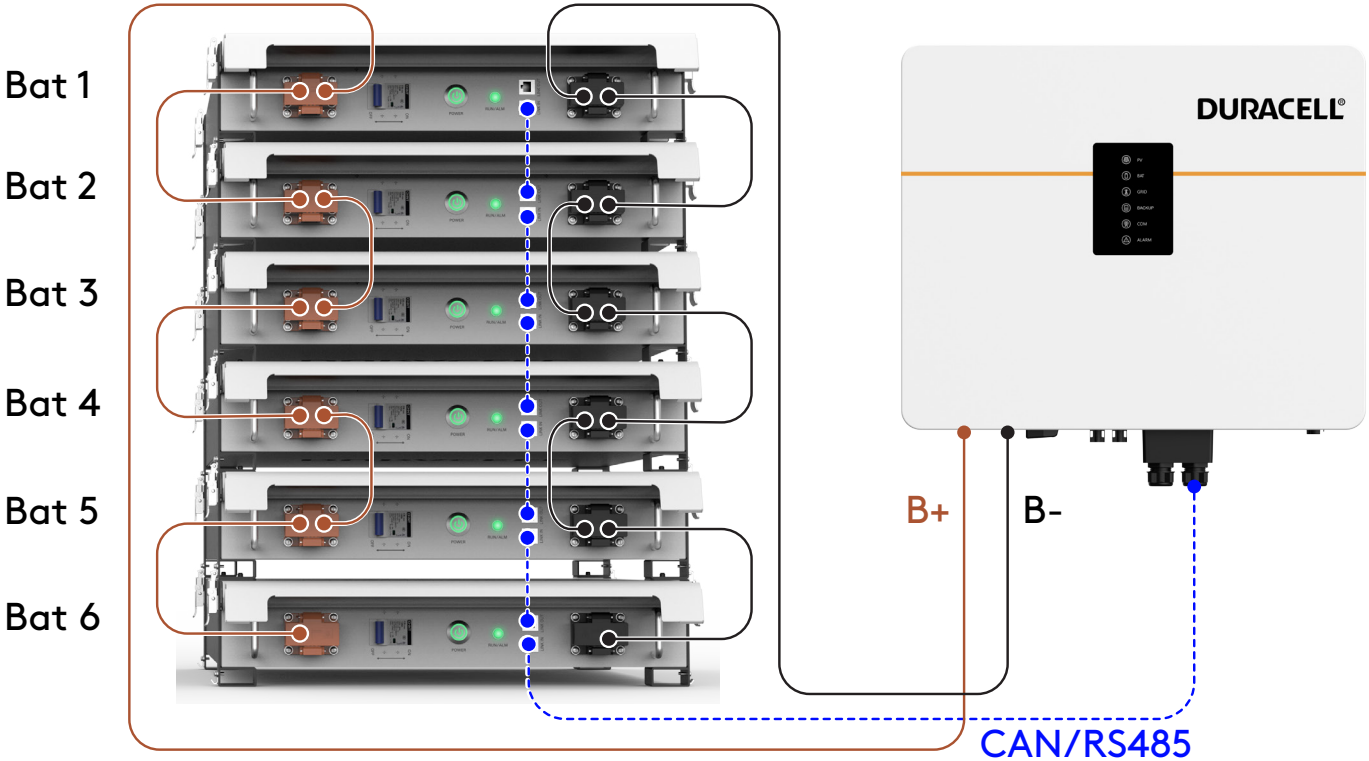

Figure 6. *Parallel setup installation - stack, multiple batteries, ensuring external-facing ports are covered for safety. Follow this procedure for any number of batteries.*

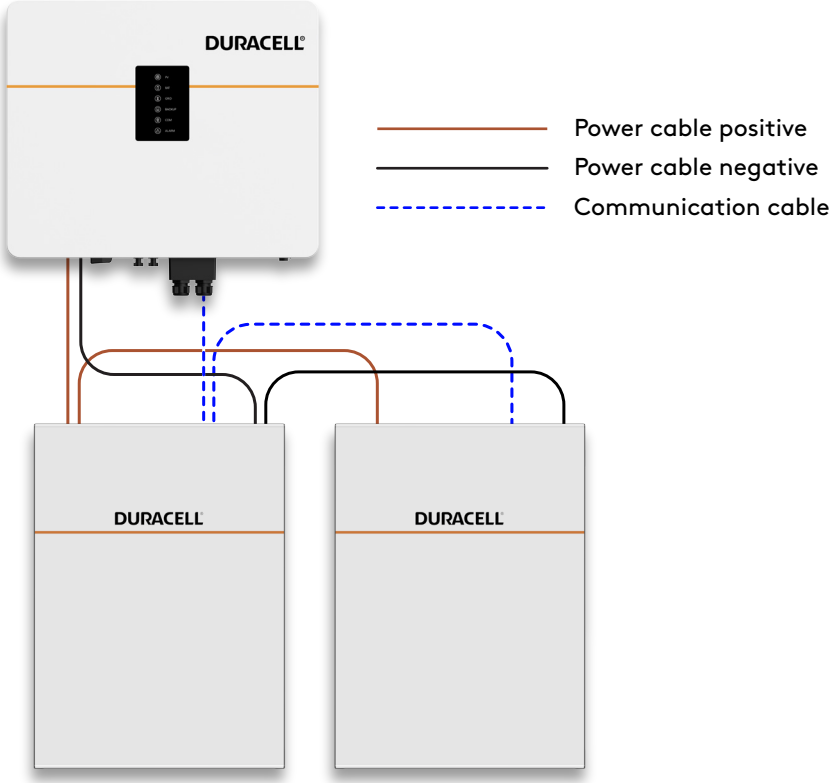

Figure 7. Two batteries, wall-mounted (a)

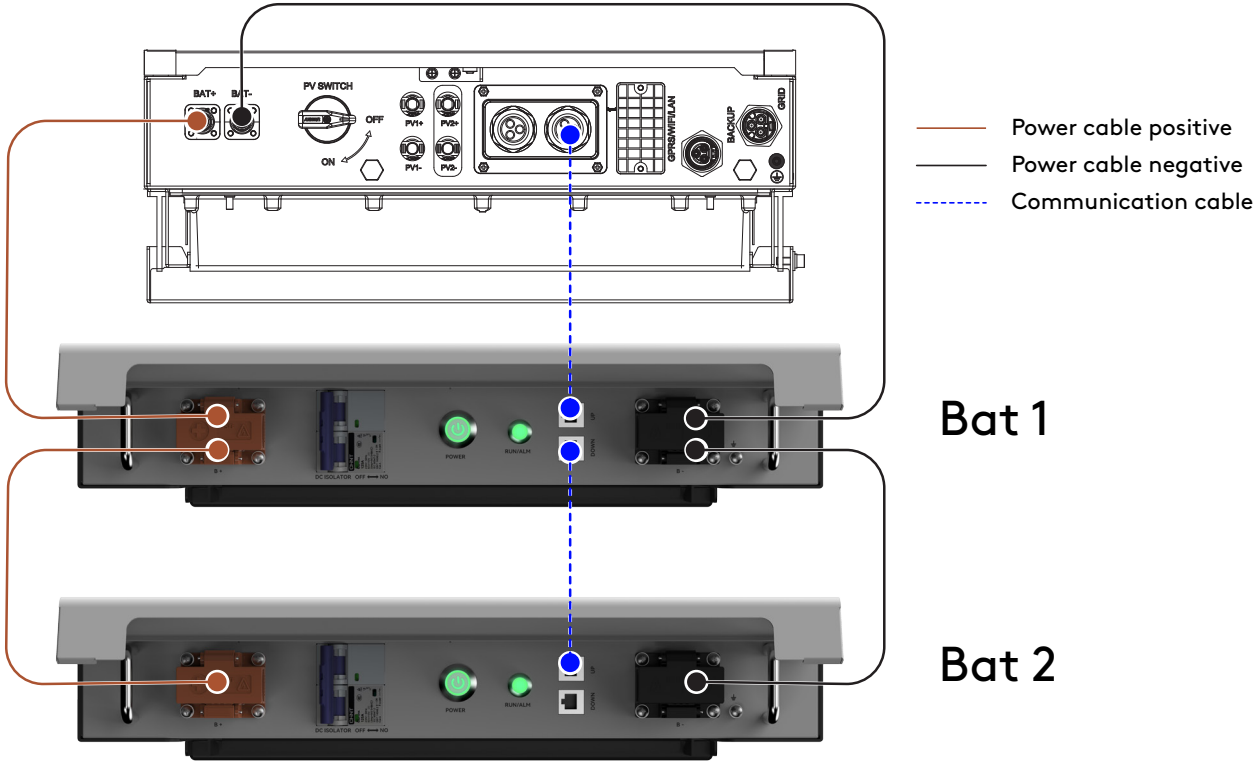

Figure 8. Two batteries, wall-mounted (b)

Operation

System Startup:

- Ensure all installation steps, including DC cable and communication wire connections, have been completed correctly and are tight on both battery and inverter.
- Open the circuit breaker.
- Press the Power Switch button. The green LED should initially blink and then transition to a steady state, indicating operational mode. (Refer to the table below for LED color interpretations related to system status.)

System Shutdown:

- Important: Verify that the system is off before disconnecting any DC cables.
- Press the Power Switch button.
- If a DC isolator switch is present, turn it to the OFF position.
- The green LED should initially blink and then turn off, indicating standby mode.
- Important: Reiterate the warning - confirm the system is off before disconnecting any DC cables.

Sleep and Wake-up Function

No.	Sleep Condition	Wake-up Condition	Mark
1	System voltage falls below 40V and remains below that level for more than 2 minutes.	Charging or Restart	Power switch on
2	Cell voltage falls below 2.5V and remains below that level for more than 2 minutes.	Charging or Restart	Power switch on

System Status Instructions

Status	Normal/Warning/ Protection	RUN	Alarm	Test	Remarks
Power OFF	Shutdown	Off	Off	Flash once	
Power ON	Turn on	Flash 1	Off	Flash once	
Standby	Normal	Flash 1	Off	Off	Standby
	Warning	Flash 1	Flash 1	Off	
Charging	Normal	Continuous	Off	Off	
	Warning	Continuous	Flash 3	Off	
	Overcharging	Off	Continuous	Off	Stop Charging
Discharging	Normal	Flash 3	Off	Off	
	Warning	Flash 3	Flash 3	Off	
	Over-discharging	Off	Continuous	Off	Stop Discharging
	Over-current, Shortcut	Off	Continuous	Off	Stop Discharging

Status	Normal/Warning/ Protection	RUN	Alarm	Test	Remarks
Temperature	Protection	Off	Continuous	Off	Stop Charging & Discharging
Malfunction	Battery Failure, Voltage.Sampling Failure, Current Sampling Failure, MOS Damage	Off	Continuous	Off	Stop Charging & Discharging
	BMS Malfunction	Off	Off	Continuous	

LED Flash Status

Status	ON	OFF
Flash 1	0.25s	3.5s
Flash 2	0.5s	0.5s
Flash 3	0.5s	1.5s

Notes

DURACELL®
ENERGY

Get in touch...

support.uk@duracellenergy.com

01386 577845

www.duracellenergy.com

Duracell is a registered trademark of Duracell Batteries BV and Duracell U.S. Operations, Inc., used under license. All rights reserved.
Manufactured under license and warranty supported by Puredrive Energy Limited in Toddington, UK.
NOTE: NEITHER DURACELL U.S. OPERATIONS, INC. NOR ITS AFFILIATES ARE INVOLVED IN THE DESIGN, MANUFACTURE, MARKETING OR DISTRIBUTION OF THE PRODUCTS AND THEY DO NOT MAKE ANY (AND HEREBY DISCLAIM ALL) EXPRESS OR IMPLIED WARRANTIES RELATING TO THE PRODUCTS